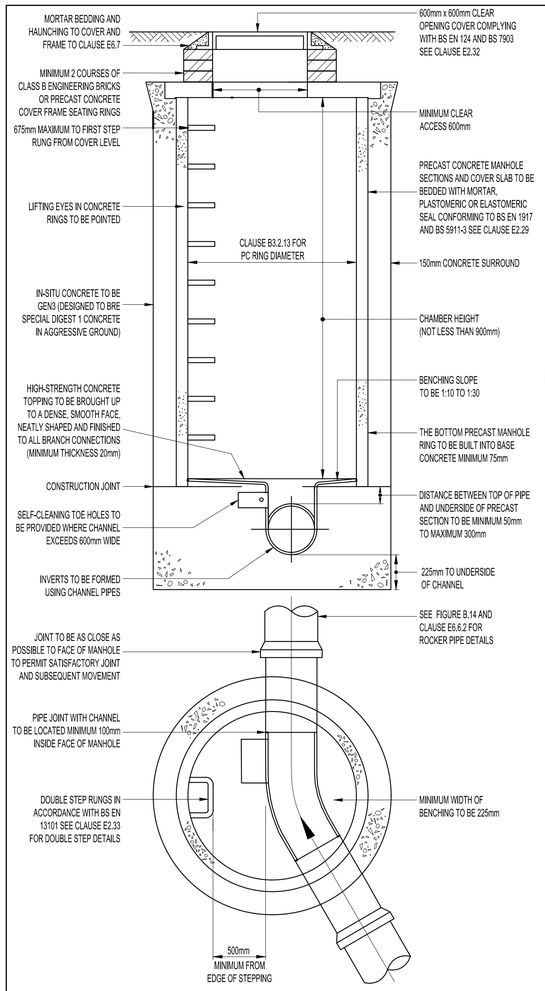

TYPICAL MANHOLE DETAIL COVER TO PIPE SOFFIT UP TO 3m

(SCALE 1:20)

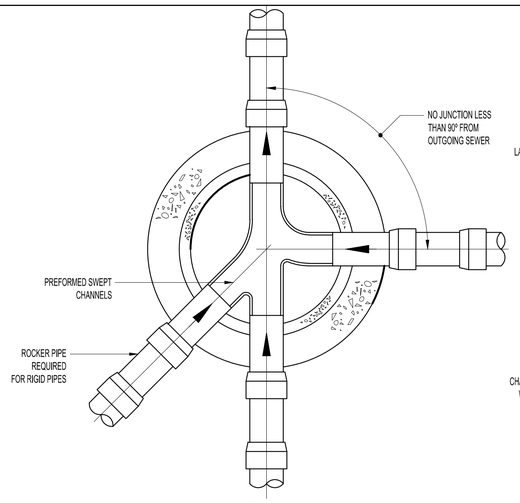

SECTIONAL PLAN

RIGID PIPES BUILT INTO MANHOLE SHOULD HAVE A FLEXIBLE JOINT AS CLOSE AS FEASIBLE TO THE EXTERNAL FACE OF THE STRUCTURE AND THE LENGTH OF THE NEXT ROCKER PIPE SHOULD BE AS SHOWN.

Nominal diameter (mm)	MAXIMUM EFFECTIVE LENGTH (m)
150 - 600	0.6
601 - 750	1.00
OVER 750	1.25

ALL PIPES ENTERING THE BOTTOM OF THE MANHOLE TO HAVE SOFFITS LEVEL.

TYPICAL ARRANGEMENT OF PIPE JUNCTIONS WITHIN MANHOLES

(SCALE 1:20)

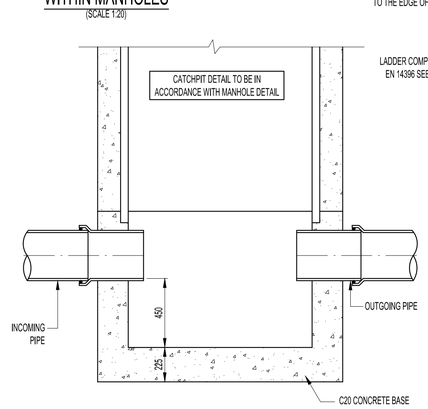

CATCHPIT MANHOLE DETAIL

(SCALE 1:20)

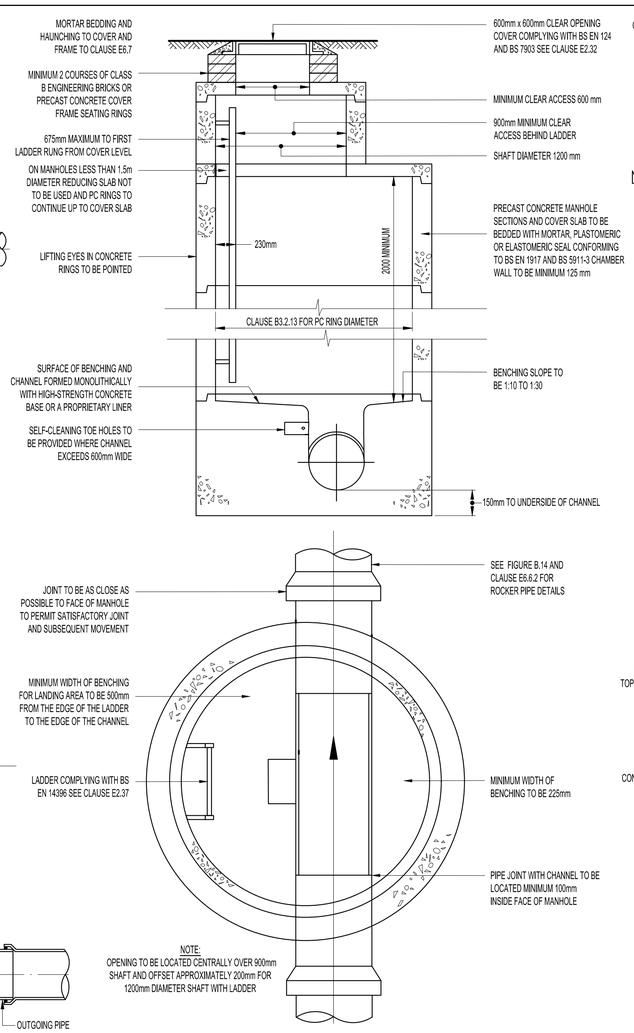

NOTE:
OPENING TO BE LOCATED CENTRALLY OVER 900mm SHAFT AND OFFSET APPROXIMATELY 200mm FOR 1200mm DIAMETER SHAFT WITH LADDER

TYPICAL MANHOLE DETAIL COVER TO PIPE SOFFIT 3m - 6m

(SCALE 1:20)

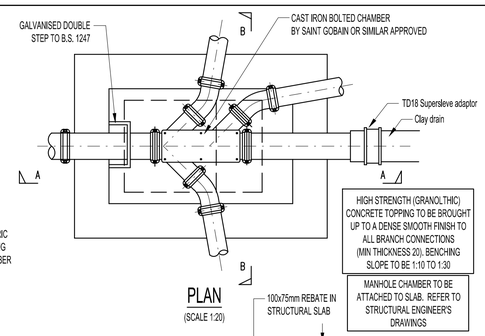

PLAN

(SCALE 1:20)

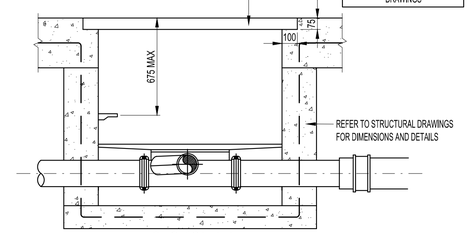

SECTION A-A

(SCALE 1:20)

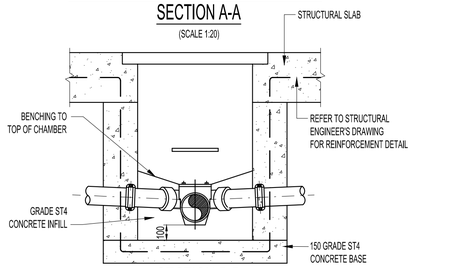

SECTION B-B

(SCALE 1:20)

TYPICAL INTERNAL MANHOLE/INSPECTION CHAMBER DETAIL

DEPTH TO INVERT UP TO 1.2m - INSPECTION CHAMBER

MAX. NO. OF SIDE ENTRY BRANCHES	MIN. CHAMBER DIMENSIONS (mm)	MIN. COVER CLEAR OPENING (mm)
1	600 x 600	600 x 600
2	900 x 600	900 x 600
3	1200 x 600	1200 x 600 (2 PART)
4	1770 x 600	1770 x 600 (2 PART)

DEPTH TO INVERT 1.2m - 1.65m

MAX. NO. OF SIDE ENTRY BRANCHES	MIN. CHAMBER DIMENSIONS (mm)	MIN. COVER CLEAR OPENING (mm)
1	750 x 750	750 x 750
2-3	1320 x 750	1320 x 750 (2 PART)
4	1620 x 750	1620 x 750 (2 PART)

DEPTH TO INVERT GREATER THAN 1.65m

MAX. NO. OF SIDE ENTRY BRANCHES	MIN. CHAMBER DIMENSIONS (mm)	MIN. COVER CLEAR OPENING (mm)
1-2	1200 x 1000	1170 x 600 (2 PART)
3	1320 x 1000	1320 x 600 (2 PART)
4	1620 x 1000	1620 x 600 (2 PART)

NOTE: COVER SIZES BASED ON PRODUCTS AVAILABLE FROM STEELWAY BRICKHOUSE

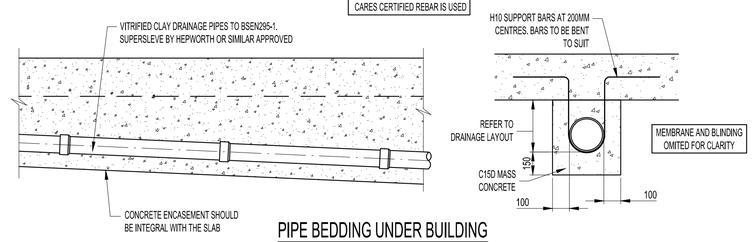

PIPE BEDDING UNDER BUILDING

(SCALE 1:20)

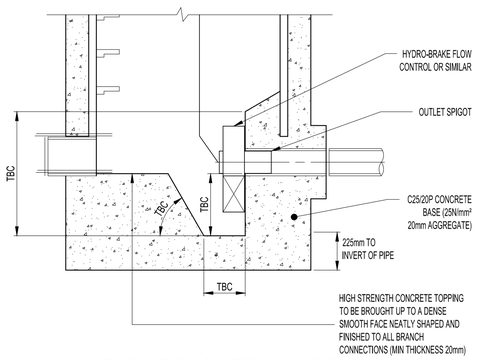

TYPICAL FLOW CONTROL MANHOLE

(SCALE 1:20)

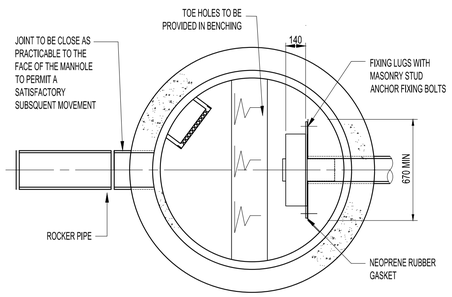

TYPICAL SECTION AT BENCHING LEVEL

(SCALE 1:20)

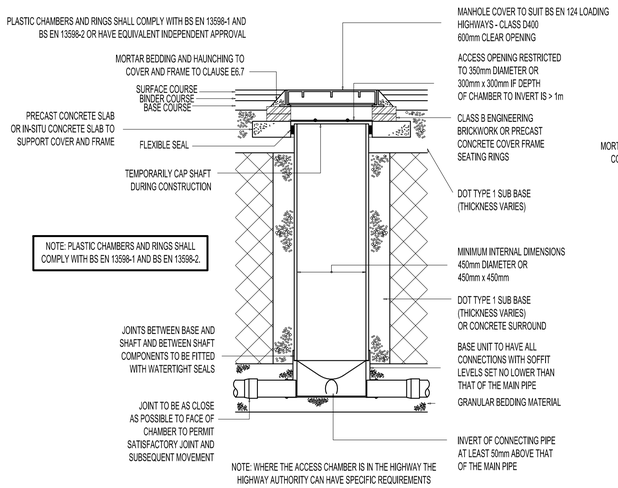

NOTE: WHERE THE ACCESS CHAMBER IS IN THE HIGHWAY THE HIGHWAY AUTHORITY CAN HAVE SPECIFIC REQUIREMENTS

TYPICAL INSPECTION CHAMBER DETAIL IN (LIGHT) VEHICULAR AREAS

(SCALE 1:20)

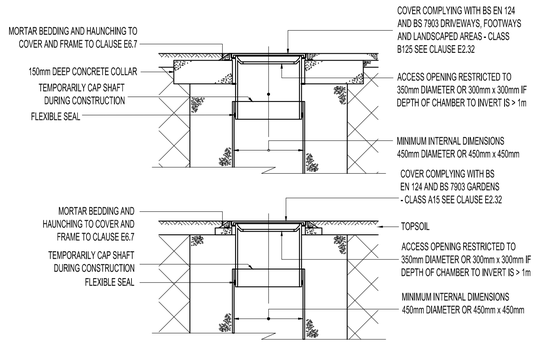

ALTERNATION TOP DETAILS FOR LIGHT VEHICLE LOADING AND LANDSCAPING AREAS

(SCALE 1:20)

PLASTIC CHAMBERS AND RINGS SHALL COMPLY WITH BS EN 13598-1 AND BS EN 13598-2 OR HAVE EQUIVALENT INDEPENDENT APPROVAL

GENERAL NOTES:

1. This drawing is to be read in conjunction with all relevant Architects and Engineers drawings and specifications.
2. Do not scale from this drawing. All details and dimensions and levels are to be checked by the contractor prior to commencement of construction. Any discrepancies are to be reported to the Engineer.
3. All levels are in meters & dimensions in millimeters unless noted otherwise.

Rev:	Description:	Date:	By:	Chkd:
T02	STAGE 4 REVISED ISSUE	22.03.19	NH	LG
T01	PHASE 1 - STAGE 4 ISSUE	15.03.19	NH	LG

curtins
40 Compton Street, London, EC1V 0BD
020 7324 2240
london@curtins.com
www.curtins.com
Structures • Civils • Environmental • Infrastructure • Transport Planning • Sustainability • Expert Advisory Services
Birmingham • Bristol • Cardiff • Douglas • Dublin • Edinburgh • Glasgow • Kendal • Leeds • Liverpool • London • Manchester • Nottingham

Status: STAGE 4

Project: SHREDDED WHEAT, METROPOLITAN

Drg Title: PROPOSED CONSTRUCTION DETAILS PHASE 1

Size:	Date:	Drawn By:	Designed By:	Checked By:
A1	01/03/2019	N.HICKMAN	L.GLAZA	L.GLAZA

Scale: NTS

Project No:	Originator:	Zone:	Level:	Type:	Discipline:	Category / Number:	Rev:
066571	CUR	00	XX	DR	C	98005	T02