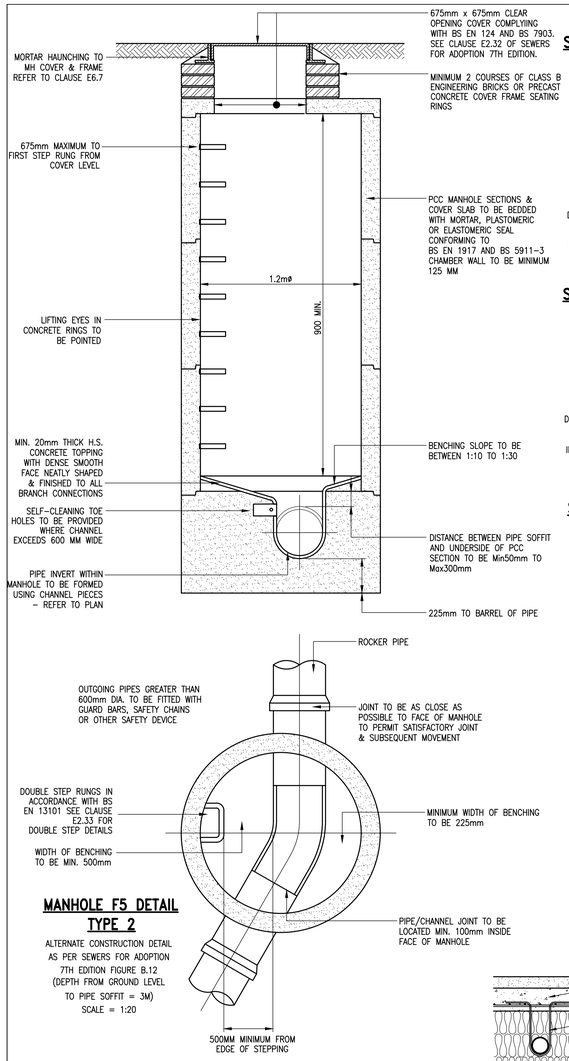

MANHOLE F5 DETAIL TYPE 2

ALTERNATE CONSTRUCTION DETAIL AS PER SEWERS FOR ADOPTION 7TH EDITION FIGURE B.12 (DEPTH FROM GROUND LEVEL TO PIPE SOFFIT = 3M)

SCALE = 1:20

SITED IN DOMESTIC DRIVEWAYS/PAVED AREAS

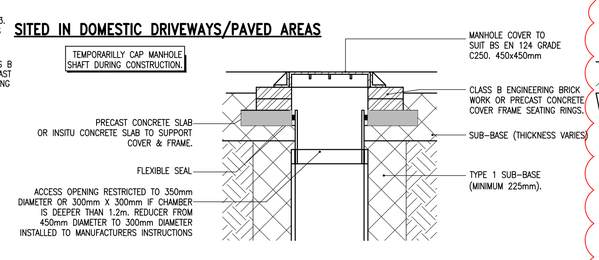

SITED IN BUILDINGS

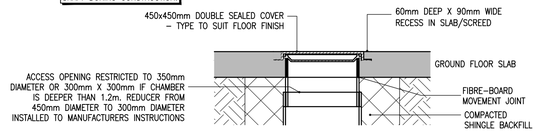

SITED IN SOFT LANDSCAPED AREAS

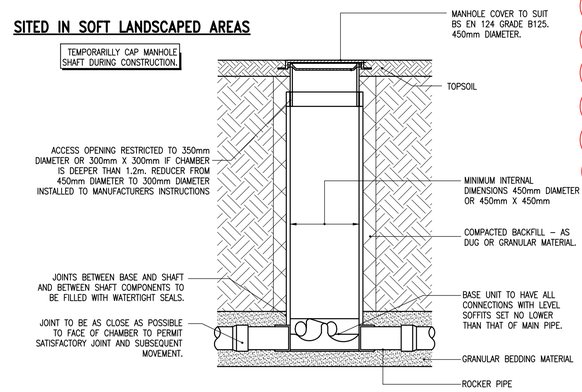

PLASTIC INSPECTION CHAMBER

SCALE 1:20

NOTE:
1. ANY INSPECTION CHAMBER WITH A DEPTH EXCEEDING 1.2m THE INSPECTION COVER MUST REDUCE TO 350mm dia AS DETAIL ABOVE.
2. PLASTIC INSPECTION CHAMBER AS SPECIFIED BY OSMADRAIN OR SIMILAR AND APPROVED.

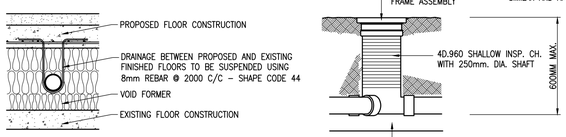

SUSPENDED DRAINAGE DETAIL

SCALE 1:20

PLASTIC ACCESS CHAMBER

SCALE 1:20

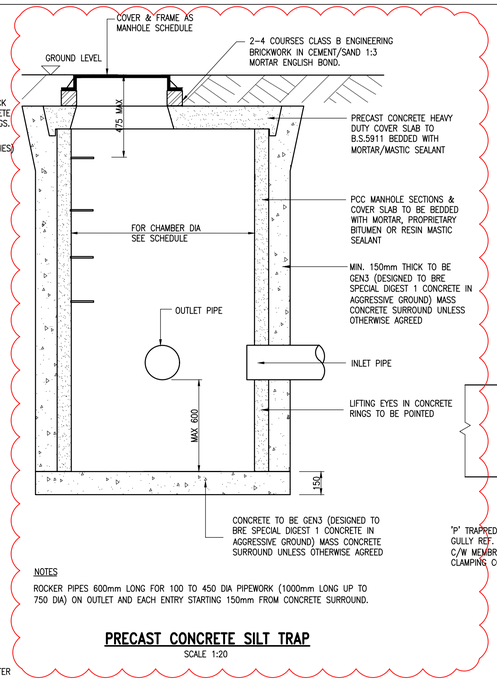

NOTES

ROCKER PIPES 600mm LONG FOR 100 TO 450 DIA PIPEWORK (1000mm LONG UP TO 750 DIA) ON OUTLET AND EACH ENTRY STARTING 150mm FROM CONCRETE SURROUND.

PRECAST CONCRETE SILT TRAP

SCALE 1:20

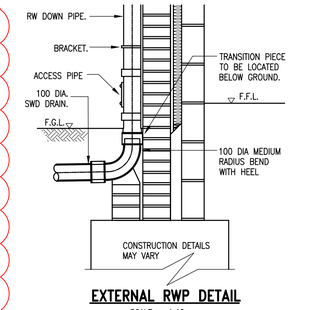

EXTERNAL RWP DETAIL

SCALE = 1:10

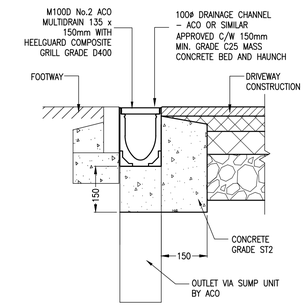

ACO M100D DRAINAGE CHANNEL

NOT TO SCALE

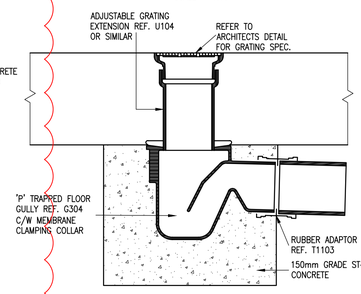

"WADE" FLOOR GULLY DETAIL

SCALE = 1:10

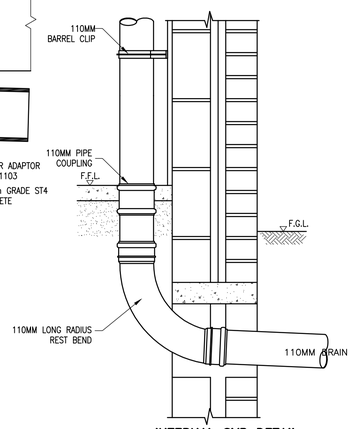

INTERNAL SVP DETAIL

SCALE = 1:10

ABOVE DETAIL IS ONLY TO BE USED WHERE SVP CONNECTS DIRECTLY TO ACCESS CHAMBER, INSPECTION CHAMBER OR MANHOLE

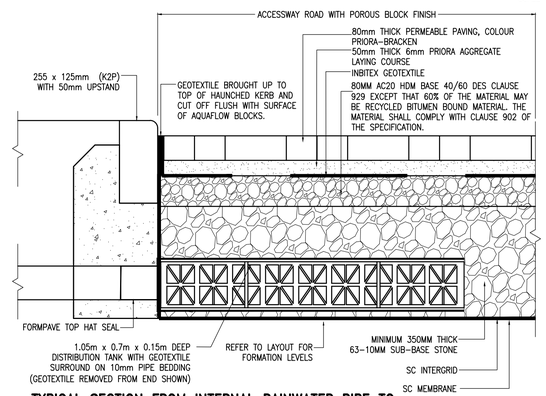

TYPICAL SECTION FROM INTERNAL RAINWATER PIPE TO PERMAVOID DISTRIBUTION CELL TANKED SYSTEM

NOT TO SCALE

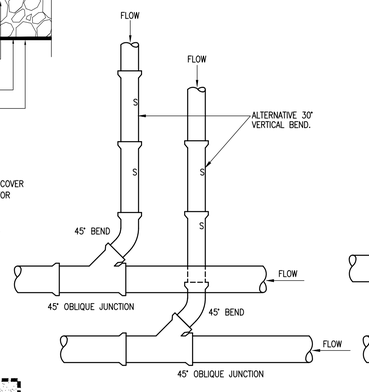

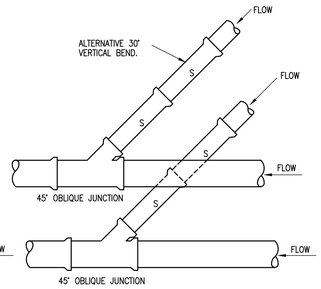

BRANCH CONNECTIONS

BRANCH CONNECTIONS TO BE 150mm MINIMUM DIAMETER.

S= SPECIAL SHORT LENGTH PIPE 600mm LONG.

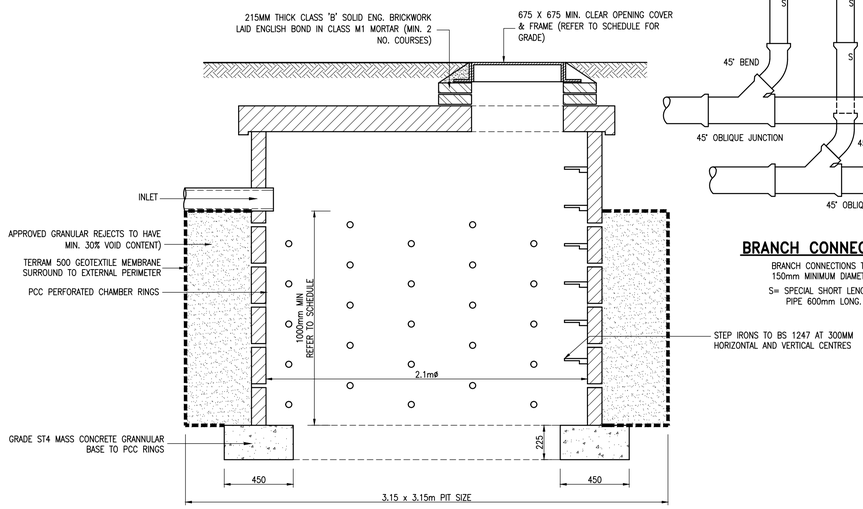

NOTES
1. ALL SOAKAWAYS TO BE SITUATED 5.0M MIN. FROM ANY STRUCTURE (MEASURED FROM EXTENT OF GRANULAR SURROUND).
2. SAMPLE TEST RESULTS ARE REQUIRED TO CONFIRM COMPLIANCE WITH THE MINIMUM VOID CONTENT SPECIFIED FOR THE GRANULAR REJECTS PRIOR TO USE ON SITE.
3. GEOTEXTILE MEMBRANE TO BE PROVIDED AGAINST ALL FACES OF SOAKAWAY PIT. THE MEMBRANE IS NOT TO BE PROVIDED TO THE FLOOR AREA WITHIN THE PCC RING PERIMETER.

PCC RING SOAKAWAY DETAIL

SCALE = 1:20

DRAIN BEDDING DETAIL

DIMENSION Y = IN ROCK, CONCRETE OR MIXED SOILS CONTAINING ROCK BANDS, BOULDERS, LARGE FLINTS OR STONES OR OTHER IRREGULAR HARD SPOTS THAT RESULT IN UNEVEN TRENCH BOTTOM Y=1/4 Bc OR 200 mm WHICH EVER IS THE GREATER, BUT NOT LESS THAN 50mm UNDER COLLARS

IN SOILS THAT PERMIT AN EVEN TRENCH BOTTOM TO BE EXCAVATED Y=1/6 Bc OR 150 mm WHICH EVER IS GREATER, BUT NOT LESS THAN 50 mm UNDER COLLARS

NOTES

1) FOR PIPES EXCEEDING 600 mm DIA REFER TO ENGINEER

2) IN WET OR SOFT GROUND SEEK GUIDANCE FROM ENGINEER

3)THE BEDDINGS MAY BE MODIFIED FOR CERTAIN SUB-SOIL CONDITIONS AT THE ENGINEERS DISCRETION

4) THE CONTRACTOR SHALL BE RESPONSIBLE FOR PROVIDING ADDITIONAL PROTECTION IN AREAS SUBJECT TO LOADS FROM SITE TRAFFIC. THE CONTRACTOR SHALL IDENTIFY THESE ZONES AND RESTRICT TRAFFIC ELSEWHERE

5) SEE ALSO BS 8301

6) FOR GREATER TRENCH WIDTHS SEEK GUIDANCE FROM ENGINEER

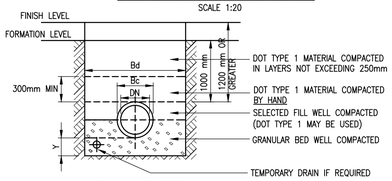

CLASS B GRANULAR BED

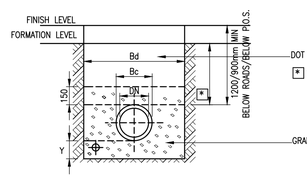

GRANULAR MATERIAL	
PIPE SIZE	AGGREGATE
100 mm	10 mm SINGLE SIZE
150 mm	10 OR 14mm SINGLE SIZE OF 14-15 mm GRADED
150 mm-500 mm	10,14,20 SINGLE SIZE OR 20-25 mm GRADED
600 mm	10,14,20 OR 40 mm SINGLE CRUSHED ROCK OR 40-45 mm GRADED

CLASS S GRANULAR SURROUND

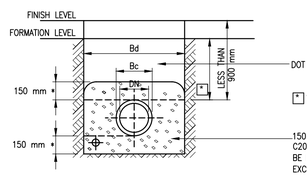

CLASS Z CONCRETE BED & SURROUND (C.B.S.)

NOMINAL INTERNAL DIA. DN (mm)	ASSUMED EXTERNAL DIA. Bc (mm)	ASSUMED MAX. PERMISSIBLE TRENCH WIDTH Bd (mm)	DIMENSION 'Y' FOR UNIFORM SOILS (mm)
100	130	600	100
150	190	600	100
225	280	700	100
300	388	800	125
375	500	1100	125
450	500	1200	125
525	670	1200	125
600	770	1400	125

NOTES

1 THIS DRAWING IS COPYRIGHT.

2 THE CONTRACTOR AND HIS SUBCONTRACTOR ARE TO VERIFY ALL DIMENSIONS ON SITE PRIOR TO MAKING SHOP DRAWINGS OR COMMENCING MANUFACTURE.

3 DO NOT SCALE THIS DRAWING. THE CONTRACTOR IS TO BRING TO THE NOTICE OF THE ENGINEER ANY DISCREPANCIES CONTAINED IN THIS DRAWING PRIOR TO WORK COMMENCEMENT.

4 ALL 150mm AND 225mm DIAMETER PIPES TO BE EXTRA STRENGTH VITRIFIED CLAY PIPES (SEE NOTE 15).

5 ALL PIPES OF 300mm DIAMETER OR GREATER TO BE CLASS M CONCRETE.

6 ALL PIPE MATERIALS TO BE CONSISTENT BETWEEN MANHOLES.

7 ALL WORK IS TO BE CARRIED OUT IN ACCORDANCE WITH SEWERS FOR ADOPTION 7TH EDITION, THE SPECIFICATION FOR HIGHWAY WORKS 1998 AND ALL SUBSEQUENT, AMENDMENTS AND LOCAL AUTHORITIES DESIGN GUIDE. WHERE THERE IS CONFLICT BETWEEN THESE DOCUMENTS THE MATTER SHALL BE REFERRED TO THE ENGINEER.

8 FOR CONSTRUCTION DETAILS OF MANHOLES AND SEWERS REFER TO SEWERS FOR ADOPTION AND UNDERTAKERS STANDARD DETAILS WHICH CAN BE OBTAINED FROM THE LOCAL OFFICE.

9 INVERT LEVELS OF EXISTING SEWERS TO BE CONFIRMED ON SITE BEFORE ANY SEWER WORK UNDERTAKEN. ANY DISCREPANCIES FOUND SHOULD BE NOTIFIED TO ENGINEERS.

10 WHERE SEWERS HAVE LESS THAN 1.2m OF COVER UNDER ROADS AND 0.9m COVER ELSEWHERE PIPES ARE TO HAVE A 150mm CONCRETE BED AND SURROUND.

11 PLASTIC CHAMBERS AND RINGS SHALL COMPLY WITH BS EN 13598-1 AND BS EN 13598-2 OR HAVE EQUIVALENT INDEPENDENT APPROVAL, TO TABLE 11 OF APPROVED DOCUMENT H1 OF THE BUILDING REGULATIONS 2010.

12 WHERE HOUSE DRAINAGE IS TAKEN THROUGH BLOCK CARE IS TO BE TAKEN THAT FOUNDATION LEVELS AND DRAINAGE RUNS DO NOT CLASH.

13 ALL ADOPTABLE MANHOLES TO HAVE A MINIMUM CLEAR OPENING OF 675mmx675mm AND GRADE D400 UNO.

14 ALL BELOW GROUND DRAINAGE TO BE 100mmø UNLESS OTHERWISE INDICATED WITH A MIN. GRADIENT AS FOLLOWS:-

S.W : 100mm Dia. 1:100
S.W : 150mm Dia. 1:150
F.W : 100mm Dia. 1:80
F.W : 150mm Dia. 1:150

15 ALL ADOPTABLE DRAINAGE MATERIALS SHOULD COMPLY WITH THE REQUIREMENTS OF PART E CIVIL ENGINEERING SPECIFICATION INCLUDED WITH SEWERS FOR ADOPTION 7TH EDITION WHICH IS DRAWN FROM CESWI 7TH EDITION BUT IS NOT A FULL REPRODUCTION.

HEALTH & SAFETY:

ALL WORKS TO BE CARRIED OUT BY A CONTRACTOR COMPETENT TO UNDERTAKE THE CONSTRUCTION OF WORKS AS INDICATED ON THIS DRAWING. THIS DRAWING IS TO BE READ IN CONJUNCTION WITH THE JOB SPECIFIC RISK ASSESSMENT. THE HAZARDS NOTED ARE IN ADDITION TO THE NORMAL HAZARDS AND RISKS FACED BY A COMPETENT CONTRACTOR WHEN DEALING WITH THE TYPE OF WORKS DETAILED ON THIS DRAWING.

CONSTRUCTION

rev	date	description	initials
C3	01/08/2019	SILT TRAP DETAIL ADDED	JP
C2	01/03/2019	SOAKAWAY NOTE 2 REMOVED	RT
C1	16/01/2019	FOR CONSTRUCTION	RT

Project
PROPOSED DEVELOPMENT - CHEQUERSFIELD

Client / Architect
TaylorWimpey

Title
DRAINAGE CONSTRUCTION DETAILS

REUBY & STAGG LTD.
CONSULTING CIVIL & STRUCTURAL ENGINEERS

Hampshire Office:
Dewey House, 55 High Street,
Ringwood, Hampshire BH24 1AE
Telephone: 01425 484400
Facsimile: 01425 484409
Email: admin@reuby-stagg.co.uk

date	scale	size	project no.	drawing no.	revision
MAY 18	AS SHOWN	A1	10390	252	C3

drawn JP
checked RB