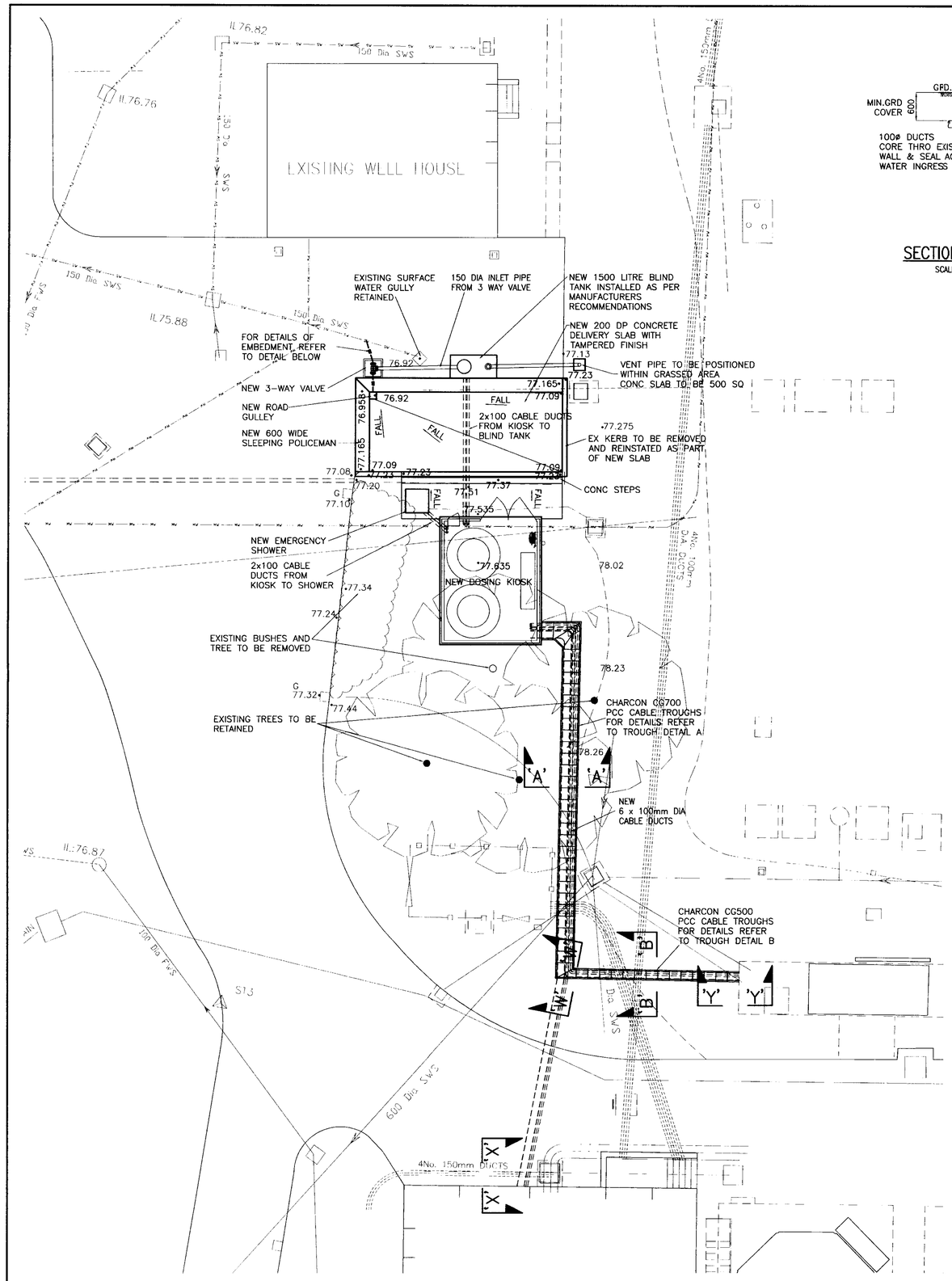

SITE LAYOUT

SCALE 1:100

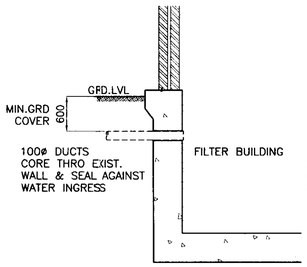

SECTION 'X-X'

SCALE 1:50

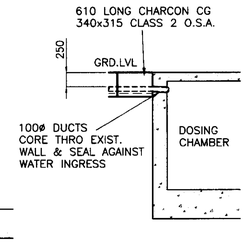

SECTION 'Y-Y'

SCALE 1:50

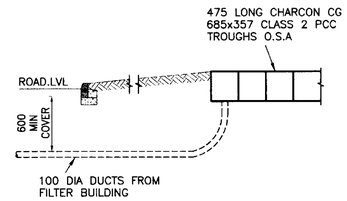

SECTION 'W-W'

SCALE 1:50

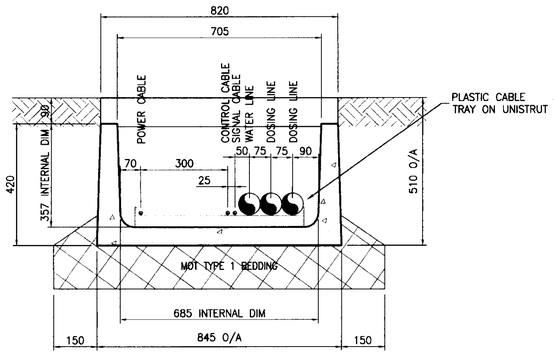

SECTION A-A
P.C.C. TROUGH UNIT-TYPE A.

AS 475 LONG CHARCON CG 685x357 CLASS 2 O.S.A.

SCALE 1:10

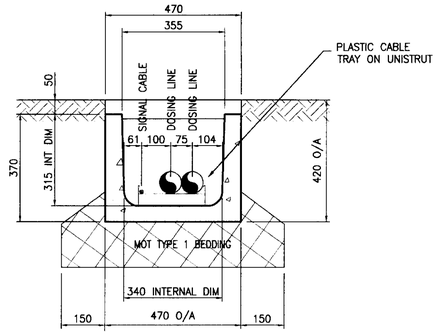

SECTION B-B
P.C.C. TROUGH UNIT-TYPE B.

610 LONG CHARCON CG 340x315 CLASS 2 O.S.A.

SCALE 1:10

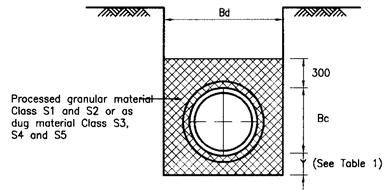

TYPE 1

EMBEDMENT CLASSES S1 TO S5

TABLE 1
Minimum Effective Embedment Dimensions for Flexible and Semi Rigid Pipes

Nominal Int Pipe Dia	Dimension Y1 (Even trench bottom)	Dimension Y2 (Rock or uneven trench bottom*)	Minimum Effective Trench Width Bd (see note 2)
<400	100	200	Bc+300

*Note:
The minimum depth of processed granular material under pipe sockets shall be 50mm for even trench bottom and 150mm for uneven trench bottom.

Bc = Outside Diameter of pipe
Bd = Effective trench width measured 300mm above crown of pipe

FLEXIBLE AND SEMI RIGID PIPE EMBEDMENTS

PLANNING DEPARTMENT OFFICE COPY
25 SEP 2009
NO: 2009/1103

REFERENCE DOCUMENTS.

DETAILS OF KIOSK	41515945/01/201/5150
CIVIL DETAILS – DELIVERY AREA	41515945/01/201/1061

NOTES.

GENERAL :

1. DO NOT SCALE FROM THIS DRAWING.
2. ALL DIMENSIONS ARE IN MILLIMETRES (mm) & ALL LEVELS ARE IN METRES (m) AOD, UNLESS STATED OTHERWISE.
3. ALL DIMENSIONS & LEVELS CHECKED ON SITE AND ANY DISCREPANCIES REPORTED TO G.H.A. Ltd.
4. THE CONTRACTOR IS ADVISED TO CHECK THE EXACT LOCATION OF ALL EXISTING UNDERGROUND SERVICES PRIOR TO CARRYING OUT EXCAVATION AND TAKE MEASURES TO PREVENT DAMAGE TO EXISTING LIVE SERVICES.

DATE	DRWN	CHKD	REVD	ISSUE	
04.08.09	B.H	B.H	P.D	B	FOR CONSTRUCTION
15.05.09	F.M	B.H	A.M	A	FOR ACCEPTANCE

Owner: mace
Blackwell House
Three Valleys Way
Bushey, Herts WD23 2LG
Tel : +44 (0) 1923 248831
Fax : +44 (0) 1923 248800
Email : tvw@mace.co.uk

Client: THREE VALLEYS WATER

MWH CONSTRUCTORS

THIS DRAWING IS ISSUED BY MWH CONSTRUCTORS SUBJECT TO THE CONDITIONS THAT IT IS NOT COPIED EITHER IN WHOLE OR IN PART OR DISCLOSED TO THIRD PARTIES UNLESS PRIOR WRITTEN AUTHORISATION IS GIVEN BY MWH CONSTRUCTORS

PREVIOUS VERSIONS OF THIS DRAWING SHOULD BE STAMPED SUPERSEDED OR DESTROYED

Client Contract Reference	Contract Reference	Scale
L1006	41515945	1:100

Project Name: GASLESS DISINFECTION CONVERSION

Title: SITE LAYOUT

Site: NORTH MYMMS WTW

Discipline: CIVIL/STRUCTURAL

Drawn	Checked	Approved	
FM	B.HALL	P.DAWSON	ISO A1 841x594mm

Drawing Number: 41515945/01/201/1060

Rev: B