PV Section - Flat roof K2 D-Dome 6.1 System

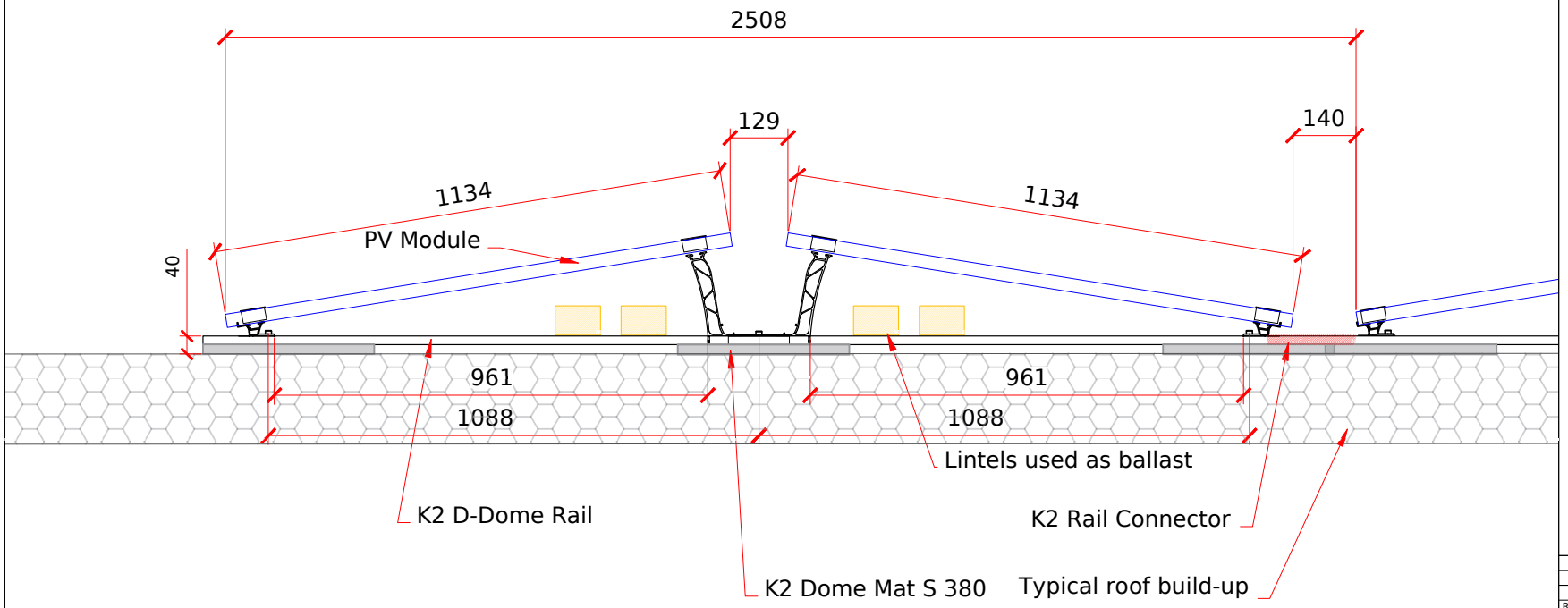

Scale

0 10 20 30 40 50 100 cm

DRAWING LEGEND

Trina Solar PV Module 420 Wp
(TSM-DE09R.08)
Dimensions:1762 x 1134 x 30mm,
Weight: 21.8 kg

K2 6.10 Dome Peak

K2 6.10 Dome-SD

K2 D-Dome Rail

K2 Dome Mat

K2 Rail Connector

Lintel used as ballast
100x65x1800mm

Rev	Description	Dwn	Chck	Date
A	Scale Bar added	CR	DB	08/05/2023

PHOTON ENERGY

© Photon Energy Ltd
8 Windsor Square
Silver Street
Reading, RG1 2TH

Tel +44 118 997 7470
info@photonenergy.co.uk
www.photonenergy.co.uk
All rights reserved

Project Number: I2018

Project Name: Queenswood School

Drawing By: Cathy Ross

Scale: 1:15 @A1

Checked By: Kiran Susarla

Date: 01/05/2023

Drawing Name: Section drawing PV panel Kennedy & Essame Hall

Drawing No: I2018-100-21

Rev: A