WINDOW	SIDE	FLOOR	TYPE
N.05	SOUTH	GROUND	SASH DOUBLE HUNG

INSIDE LININGS ELEVATION
Scale 1:10

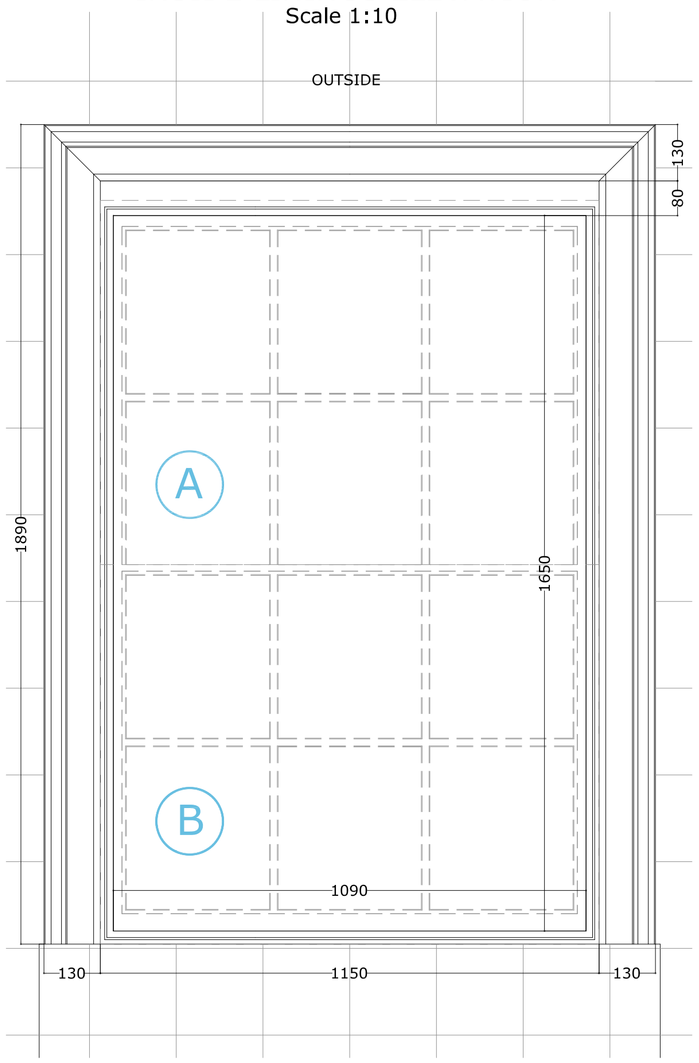

WINDOWS
Scale 1:10

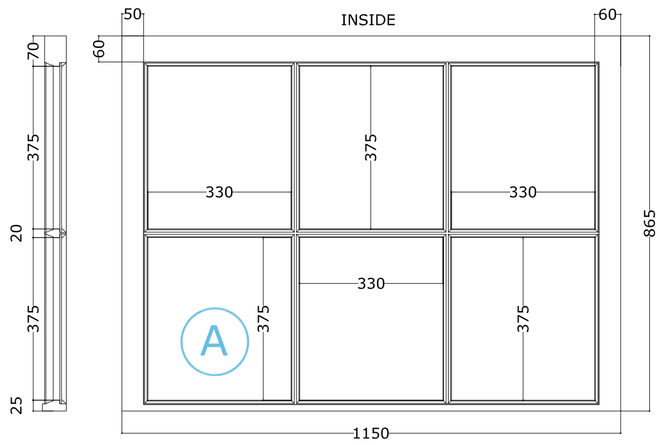

UPPER WINDOW

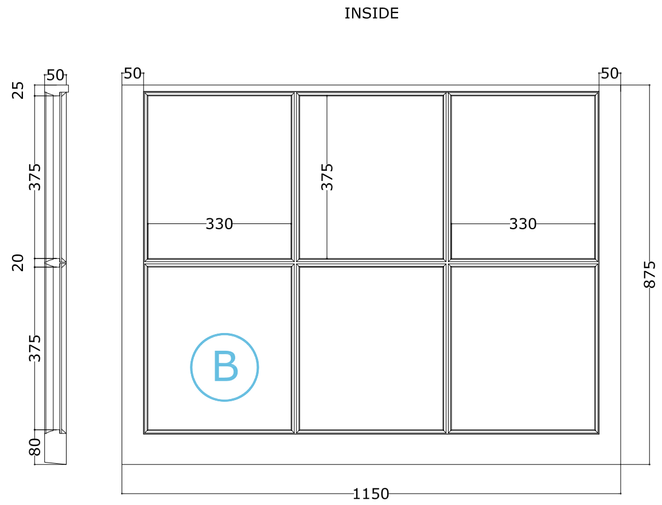

LOWER WINDOW

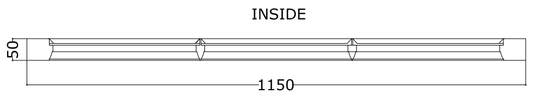

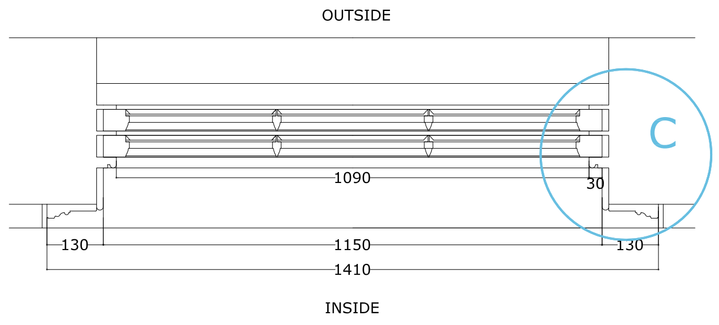

PLAN SECTION
Scale 1:10

LOWER WINDOW UPPER WINDOW
Scale 1:2

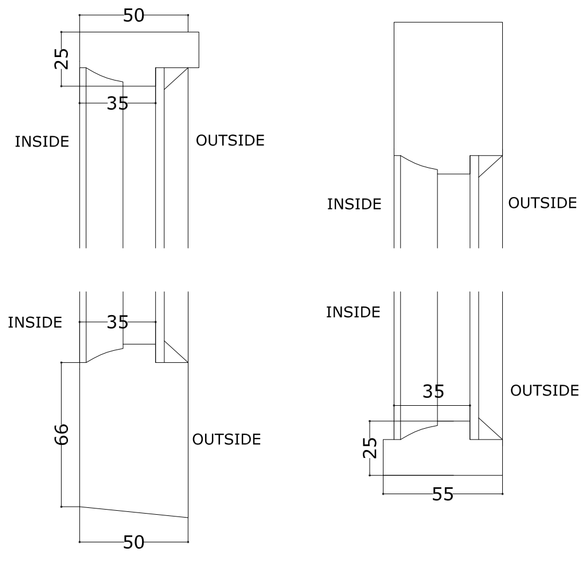

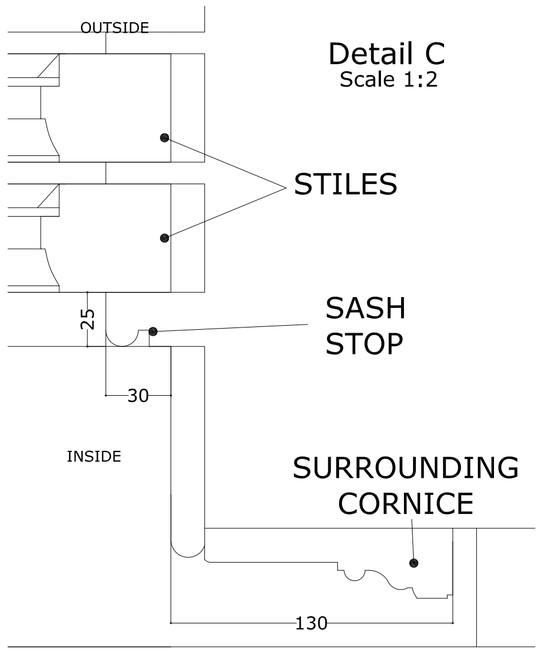

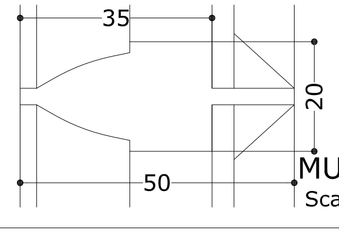

MUNTIN
Scale 1:1

W 05

W 06

WINDOW	SIDE	FLOOR	TYPE
N.06	SOUTH	GROUND	SASH DOUBLE HUNG

OUTSIDE LININGS ELEVATION
Scale 1:10

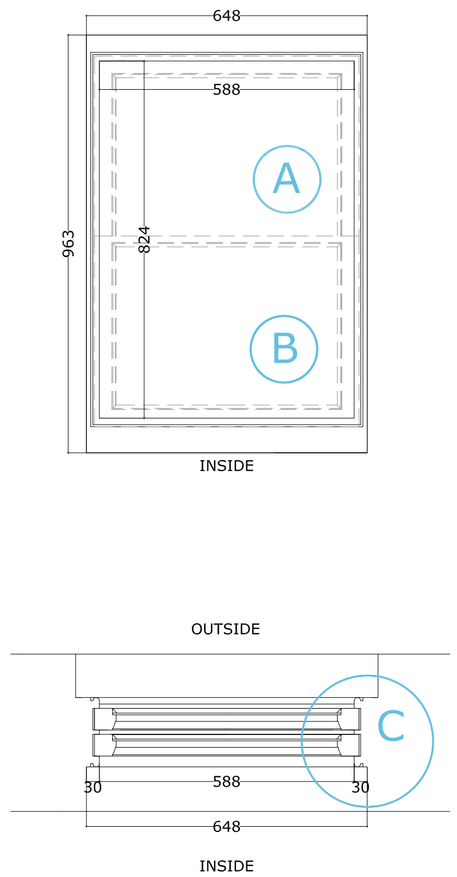

PLAN SECTION
Scale 1:10

WINDOWS
Scale 1:10

UPPER WINDOW

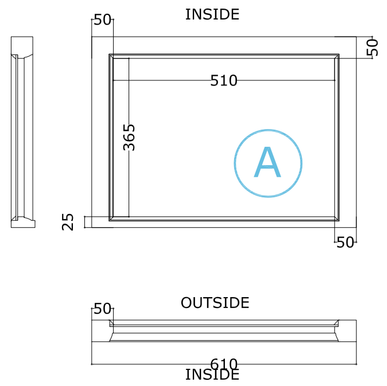

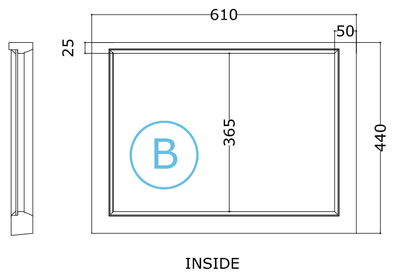

LOWER WINDOW

LOWER WINDOW UPPER WINDOW
Scale 1:2

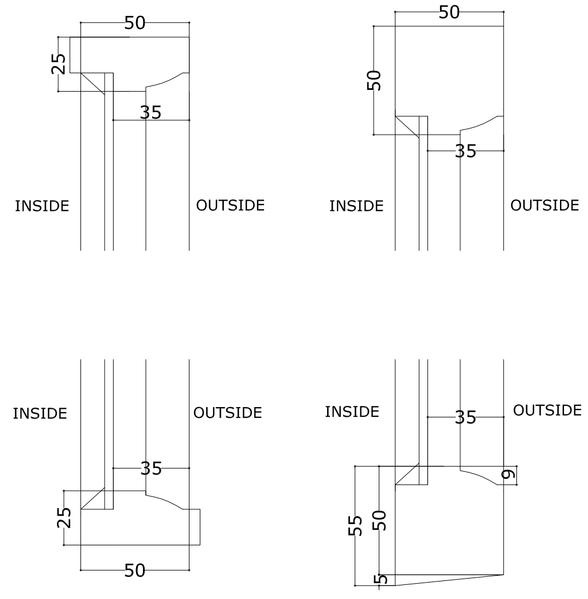

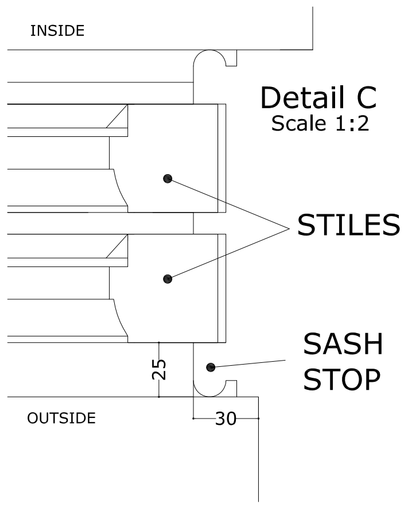

GENERAL NOTES

All dimensions to be checked on site and any discrepency to be notified to the supervising officer.
No dimension to be scaled from the drawings for construction purposes unless otherwise indicated. All work is to comply with Building Regulations including amendments made in April 2002.

The sole purpose of this drawing is the procurement of Planning Permission and Building Regulation approval and work is NOT to commence before such approvals.

Where this drawing is used for the works full specifications should be agreed with the tenderer to include Heating, Plumbing & other services where required.

Heating work or other appliances involving Gas should be carried out by a 'CORGI' approved contractor.

SOUTH ELEVATION

SOUTH ELEVATION

REVISION	DESCRIPTION	BY	DATE

Saloria CHARTERED ARCHITECTS
Unit 26 Cygnus Business Centre, Dalmeyer Road NW10 2XA
Tel.: +44 (020) 8451 7833 +44 (020) 8459 9600
Fax: +44 (020) 8451 3370
Email: l.vekaria@saloria.co.uk website: www.saloria.co.uk

PROJECT
EXISTING WINDOWS - SURVEY -
MAIN HOUSE AT OSHWAL CENTRE
COOPERS LANE ROAD
NORTHAW HEARTFORDSHIRE EN6 4DG

DRAWING TITLE
WINDOWS 5-6

DATE	15.05.2015	DRAWN BY	DP
SCALE	VARIOUS@A1, VARIOUS-1/2@A3	CHECKED BY	LV

DRAWING NO. 6842-53-P0 REVISION